REV	DESCRIPTION	BY	DATE

NOTE TRANSFORMER PART NUMBERS:
240VAC OR 480VAC – PH50MQMJ
380VAC – PH50MEMX

3HP, 240VAC PART NUMBER WJ200–022LF, 20A FUSES
3HP, 480VAC (OR 380VAC) PART NUMBER WJ200–022HF, 10A FUSES
5HP, 240VAC PART NUMBER WJ200–037LF, 30A FUSES
5HP, 480VAC (OR 380VAC) PART NUMBER WJ200–040HF, 15A FUSES

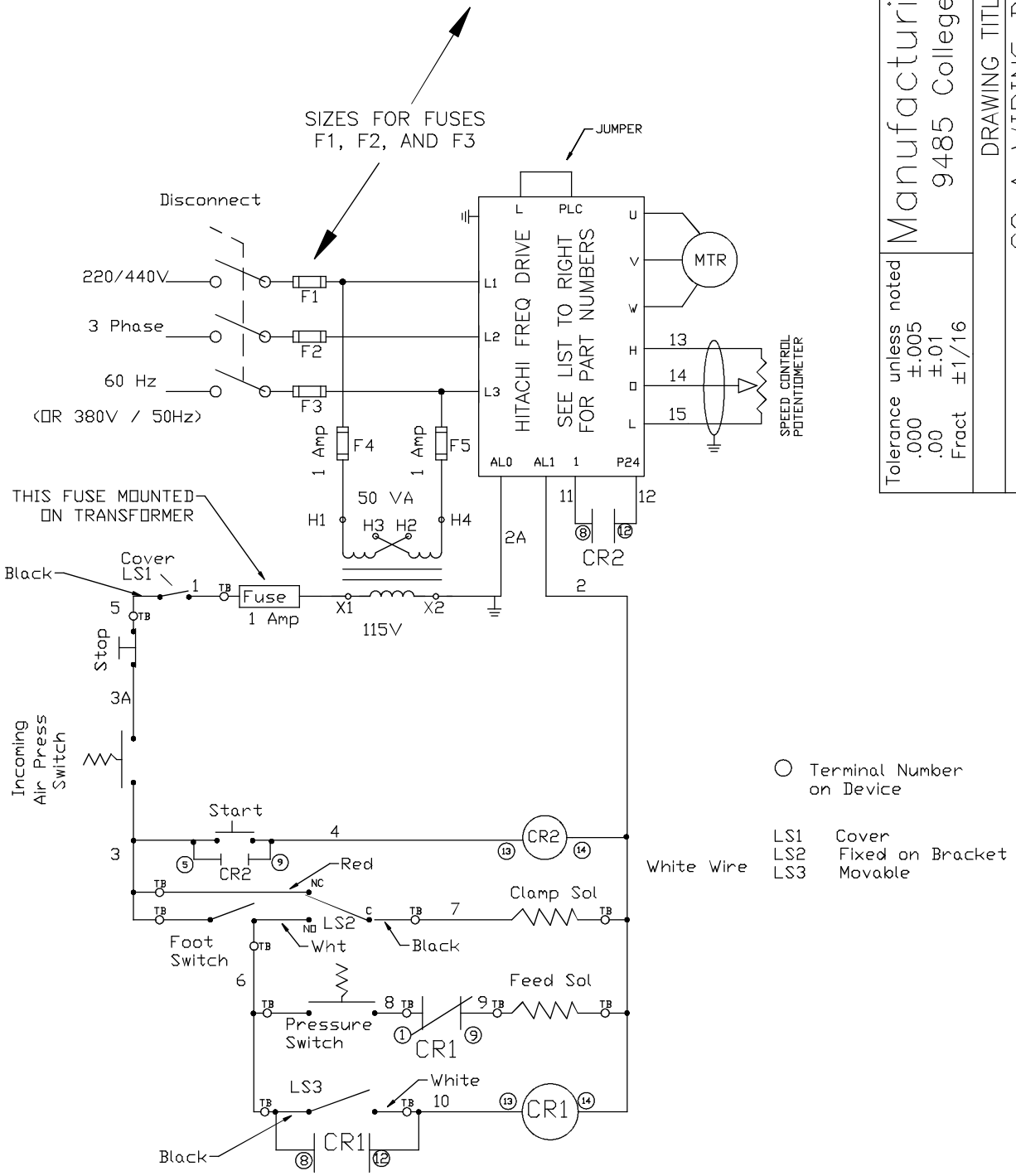

Manufacturing Solutions, Inc.
9485 College St, Beaumont, Texas

Tolerance unless noted
.000 ±.005
.00 ±.01
Fract ±1/16

DRAWING TITLE
C3-A WIRING DIAGRAM
WITH WJ-SERIES HITACHI, AND AIR PRESS SWITCH

DRAWING SIZE	A	SCALE	1:1	SHEET 1 OF 1	DO NOT SCALE DRAWING	ALL DIMENSIONS IN INCHES
DRAWN BY	EJL	APPR BY		DATE 12/09/11	DRAWING NUMBER 14777	REV –

THIS PRINT IS THE PROPERTY OF MANUFACTURING SOLUTIONS, INC. THE INFORMATION CONTAINED HEREIN IS CONFIDENTIAL AND MAY NOT BE USED, DIVULGED, COPIED, NOR REPRODUCED WITHOUT THE EXPRESS WRITTEN PERMISSION OF MANUFACTURING SOLUTIONS, INC.

DRAWING NUMBER 14777 REV –